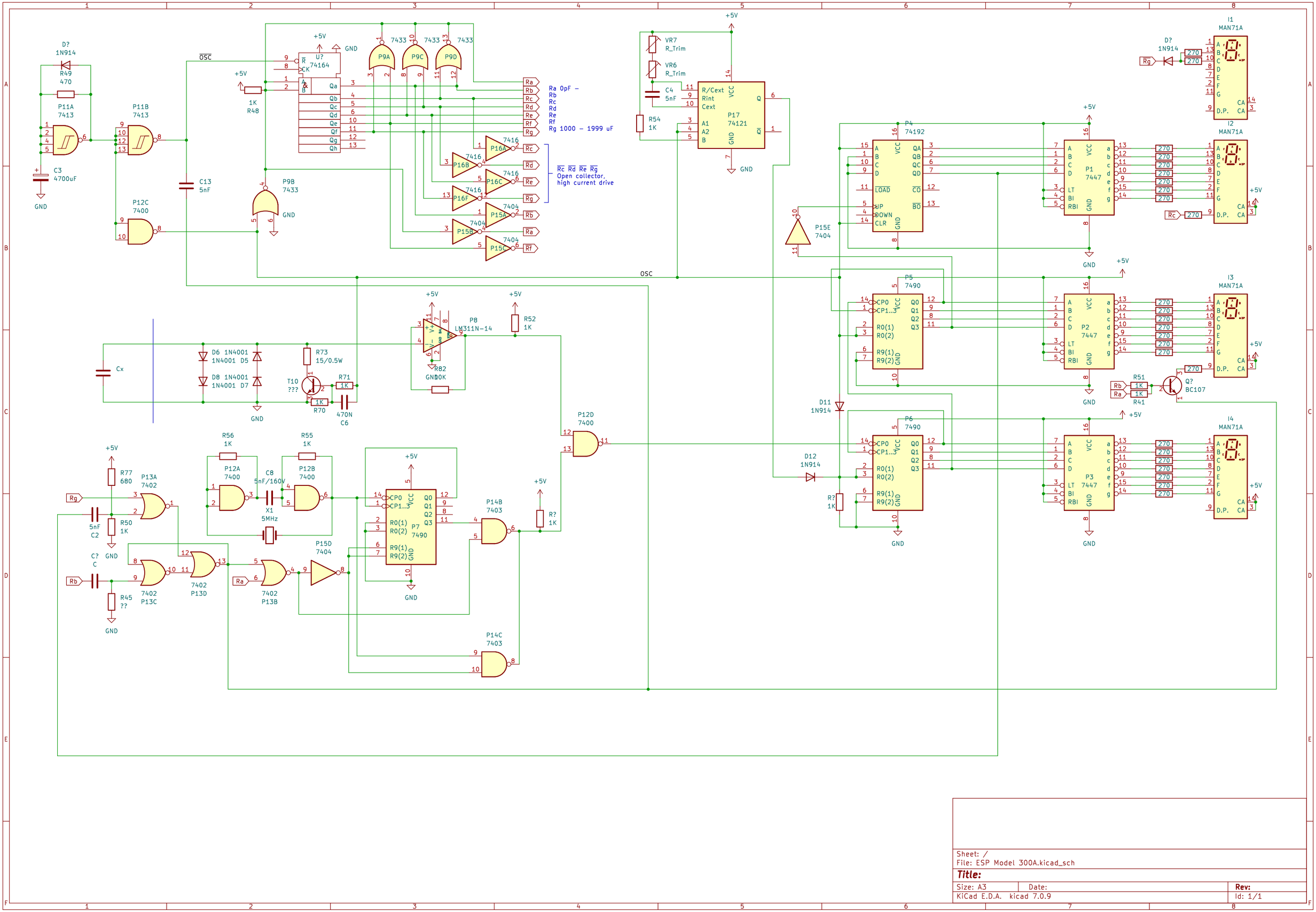
D? 1N914
R49 470
P11A 7413
C3 4700uF
GND
P11B 7413
P12C 7400
OSC
C13 5nF
+5V
1K R48
U? 74164
Qa Qb Qc Qd Qe Qf Qg Qh
P9A P9C P9D 7433
P9B 7433
Ra Rb Rc Rd Re Rf Rg
Ra 0pF – Rg 1000 – 1999 uF
P16A P16B P16C P16F 7416
P15A P15B P15C 7404
Rc Rd Re Rg
Open collector, high current drive
VR7 R_Trim
VR6 R_Trim
C4 5nF
R54 1K
R/Cext Rint Cext A1 A2 B VCC Q GND
P17 74121
P15E 7404
P4 74192
P1 7447
P5 7490
P2 7447
P6 7490
P3 7447
I1 I2 I3 I4 MAN71A
R51 1K
R41 1K
Q? BC107
D11 1N914
D12 1N914
R? 1K
Cx
D6 1N4001 1N4001 D5
D8 1N4001 1N4001 D7
R73 15/0.5W
T10 ???
R71 1K
R70 1K
470N C6
P8 LM311N-14
R82 100K
R52 1K
P12D 7400
R56 1K
R55 1K
P12A 7400
P12B 7400
C8 5nF/160V
X1 5MHz
P7 7490
P14B 7403
P14C 7403
P15D 7404
R77 680
P13A 7402
5nF C2
R50 1K
C? C
R45 ??
7402 P13C
7402 P13D
7402 P13B
Rg
Rb
Ra
Sheet: /
File: ESP Model 300A.kicad_sch
Title:
Size: A3
Date:
Rev:
KiCad E.D.A. kicad 7.0.9
Id: 1/1