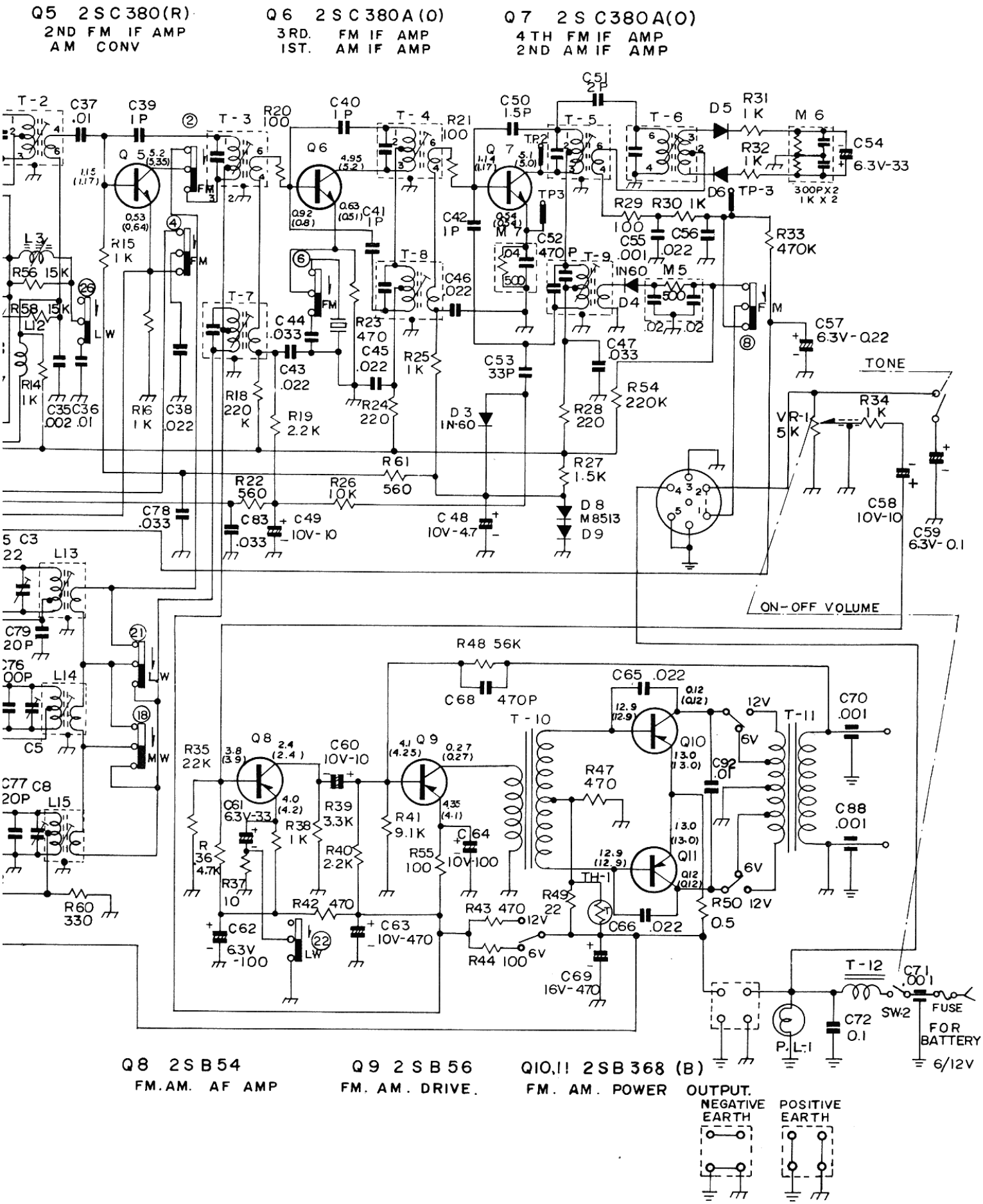

Figure 5 Schematic Diagram

www.radiomuseum.org; upload by Josef Pilz; download by Steffen Pauli Wed Oct 15 08:31:30 UTC 2025 [1500 x 1944, 148kb, ? DPI]